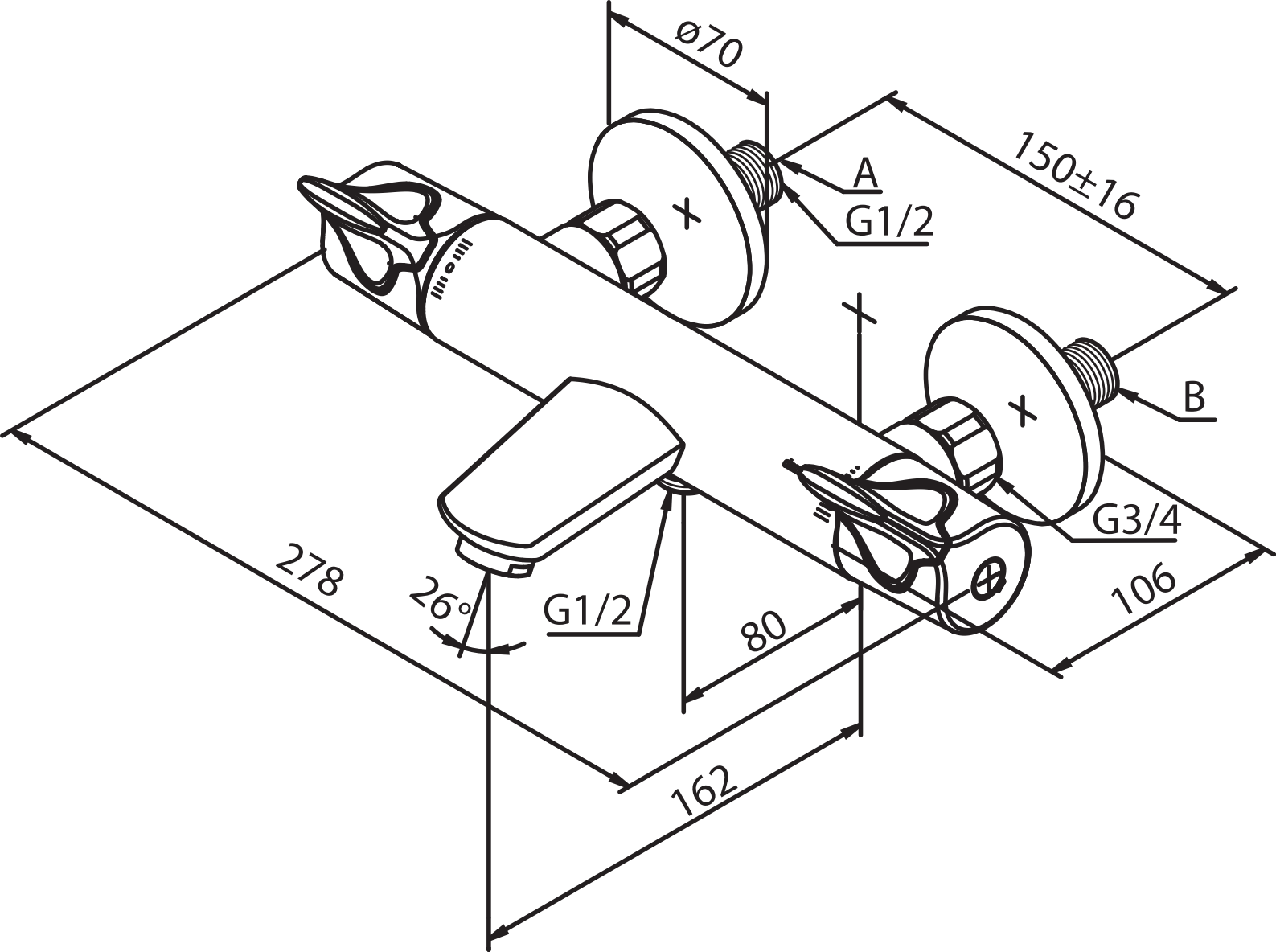
ø70
A
G1/2
150±16
B
G3/4
278
26°
G1/2
80
106
162